EWO/EWC/EWR

Displacement unit to be recessed into walls

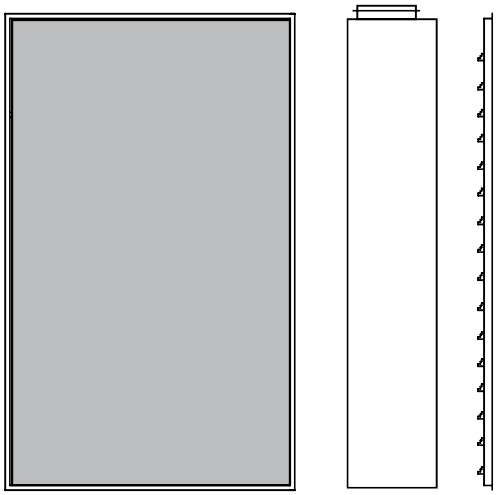

- **Front panel flush with wall**
- **Tailor-made dimensions**
- **With or without plenum**

EW series terminals can be used in all type of installations to provide displacement ventilation. They are designed to be installed recessed in a wall or ceiling so the front is flush with wall or ceiling, reducing the visual impact within the architectural surroundings.

Design
The terminal consists of a perforated front panel, which is recessed into a rigid frame with or without flanges.
The front is, fixed with screws Behind the perforated front is an air distribution plate with nozzles.

Versions
EWO is a terminal only (robust frame, no plenum), for mounting in a duct or on-site plenum.
EWC is a terminal with plenum and circular spigot.
EWR is a terminal with plenum and rectangular spigot.

Frontal face
EW-/1 units has a non perforated flange of about 20mm on all sides .

If a continuous effect is required, with a long and narrow terminal the front plates are manufactured in equal sections up to 2m long (fig3), with continuation of perforation between intermediate sections for an unbroken design (fig.4 and 5).
EW- /O is a version without 20mm flange (fig. 2)

Material
Front is made in 1.25mm hot dipped galvanized sheet steel. Frame construction is made from 1mm electro galvanized sheet steel . Plenums are made in 0.7-1mm depending on size. The front and frame are powder coated in RAL 9010 Others colours according to RAL and NCS are available on request.

Special versions
Ew units can also be supplied in stainless steel.

Reinforced front

See page 3

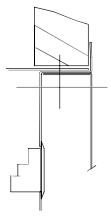

fig. 1

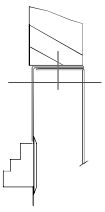

fig. 2

fig. 3

fig. 4

fig. 5

Dimensions

EWO terminals are manufactured in width and height to suit customer's requirements. The limitations are shown in table 1.

Table 1

EWO	Max	Min
A	1200	100
B	2000	300

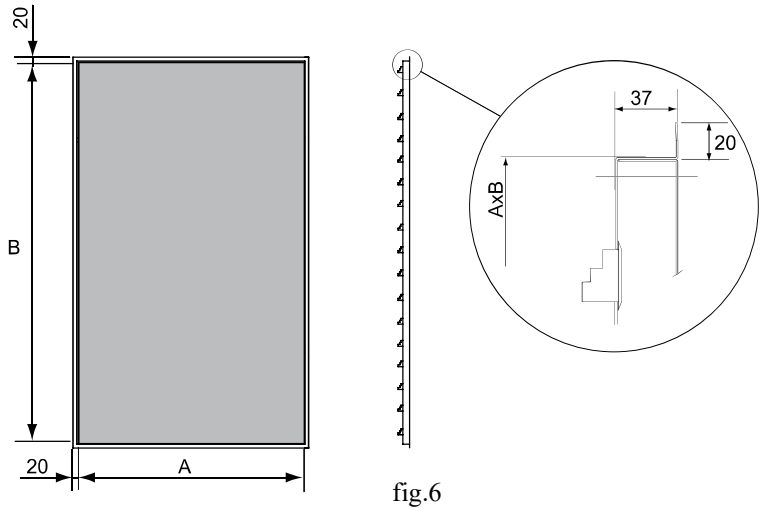

fig.6

EWC/EWR terminals consists of an EWO supplied with an assembled plenum box. The terminals are manufactured in dimensions to suit the customer's requirements.

The limitations are shown in table 2.

See fig 7 for details of dimensions depending on circular or rectangular spigots.

Table 2

EWC/EWR	Max	Min
A	1200	100
B	2000	300
C	500	-

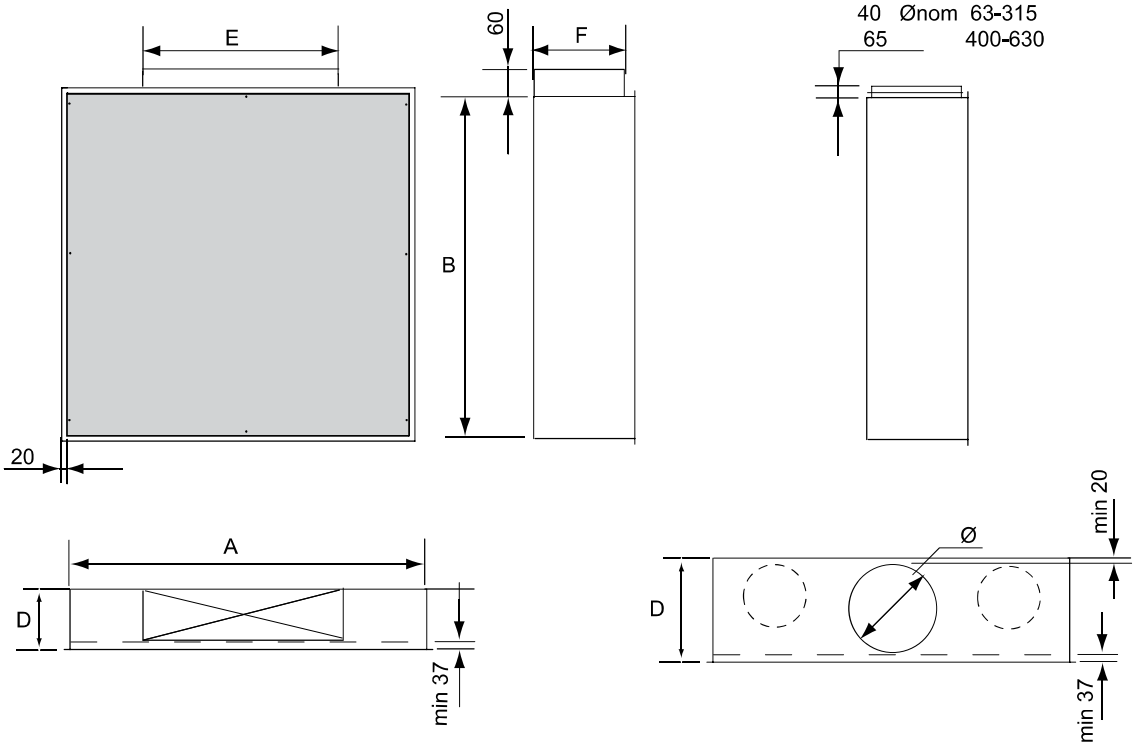

fig.7

Assembly

Wall-mounting onto plenum

The EWO is fitted onto a plenum recessed in a wall;
the frame of EWO is screwed onto the plenum box.

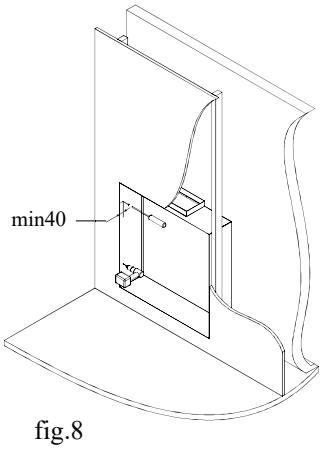

fig.8

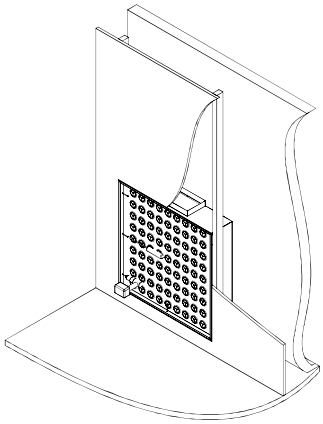

fig.9

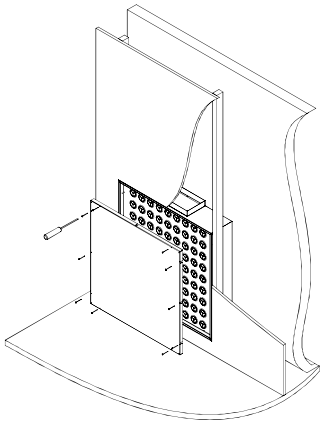

fig.10

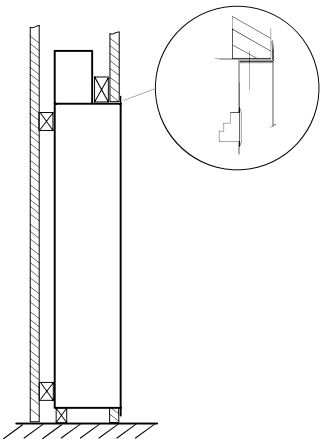

fig.11

Ceiling Duct

The EWO is fitted onto a duct: fixing is done by drilling screw holes in the 20mm front flange.

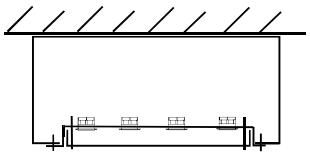

fig.12

Specials

Reinforced front

Alt. 1 2mm thick perforated front and additional U profiles as extra support. Number of profiles depending on size of unit. Other parts as standard

Alt. 2 3mm thick perforated front and additional U profiles as above.

Front panel fixed with screws.

Stainless steel

Standard quality: EN 1.4301 (AISI 304) visible surface brushed
not visible 2B finish

On request EN 1.4436 (AISI 316)

Standard thickness front: 1mm

Option 1 EWO Front and frame in stainless steel nozzle plate in galvanized sheet steel . Plenum box in galvanized sheet steel.

Option 2 EWO Front, frame and nozzle plate in stainless steel. Plenum box in galvanized sheet steel.

Option 3 All parts made in stainless steel

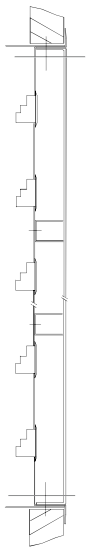

fig.13

The fixation of the front is done by screws.

Technical Data

EWO (without plenum)

Table 1 is only a guide line of suitable air flows for comfort applications. The air velocity over the front face is 0.25 m/s. For industrial applications the air flow can be increased up to twice the listed air flow. The given sound power levels would increase by up to 5 dB(A) and pressure drop would be up to four times higher. The adjacent zone L 0.2 would vary depending on air flow and terminal height. Given values are shown for terminal sizes 12-03,20-05 and 20-12. For more accurate data, please contact your nearest BEMAIR representative.

Table 1
Air flow l/s
Size x100 provide height/width in mm

Height Size	Width 03	04	05	06	07	08	09	10	11	12
01	8	10	13	15	18	20	23	25	28	30
02	15	20	25	30	35	40	45	50	55	60
03	23	30	38	45	53	60	68	75	83	90
04	30	40	50	60	70	80	90	100	110	120
05	38	50	63	75	89	100	113	125	138	150
06	45	60	75	90	105	120	135	150	165	180
07	53	70	89	105	123	140	158	175	193	210
08	60	80	100	120	140	160	180	200	220	240
09	68	90	113	135	158	180	203	225	248	270
10	75	100	125	150	175	200	225	250	275	300
11	83	110	138	165	193	220	248	275	303	330
12	90	120	150	180	210	240	270	300	330	360
13	98	130	163	195	228	260	293	325	358	390
14	105	140	175	210	245	280	315	350	385	420
15	113	150	188	225	263	300	338	375	413	450
16	120	160	200	240	280	320	360	400	440	480
17	128	170	213	255	298	340	383	425	468	510
18	135	180	225	270	315	360	405	450	495	540
19	143	190	238	285	333	380	428	475	523	570
20	150	200	250	300	350	400	450	500	550	600

$L_{WA} \leq 30$ dB(A)
$\Delta p \leq 8$ Pa
$L_{0.2}$ Δtu 3k $\leq$ 1.3m
$L_{0.2}$ Δ tu 6k $\leq$ 2m

$L_{WA} \leq 35$ dB(A)
$\Delta p \leq 8$ Pa
L 0.2 Δtu 3k $\leq$ 2m
L 0.2 Δtu 6k $\leq$ 3. 2m

$L_{WA} \leq 38$ dB(A)
$\Delta p \leq 8$ Pa
L 0.2 Δtu 3k $\leq$ 2.5m
L 0.2 Δtu 6k $\leq$ 4m

EWC,EWR

Sound level and pressure drop can be higher dependant on actual plenum size and connection used. For more accurate data contact your nearest BEMAIR representative.

Maintenance
Clean with water and mild detergent. The front is easy to dismantle for internal cleaning.

Specification
BEMAIR EWO low velocity unit for flush mounted in walls, alt. ceilings . Width ..... mm Height ..... mm depth 37mm

BEMAIR EWC/EWR low velocity unit for flush mounted in walls, alt. ceilings. Width ..... mm Height ..... mm Depth .....mm . EWC with connection diameter Ø.....mm.
EWR with rectangular connection ..... mm.

Front side with surrounding 20mm flange. .... /O Front side without flange . Front fixed with screws , . Internal air distribution plate with nozzles. Front side powder coated galvanized sheet steel in RAL9010 or special colour according to RAL or NCS. Plenum boxes made from galvanized sheet steel.

BEMAIR EW..... as continuous front face with gable units and in between units, total length .....mm height..... . Consisting of ..... (specify each unit)

Product code

EWO/a -bbbb-cccc RAL 9010 (alt. Other RAL or NCS)

- cccc: Height in mm
- bbbb: Width in mm
- a: a=1 20mm Flange / a=O without flange

EWC/a-bbbb-cccc-ddd-Ø RAL 9010 (alt. Other RAL or NCS)

- a-bbbb-cccc: as EWO
- Ø: Size of round connection according to EUROVENT
- ddd: Depth in mm

EWR/a-bbbb-cccc-ddd-exf RAL 9010 (alt. Other RAL or NCS)

- a-bbbb-cccc: as EWO
- exf: Size of rectangular connection width x depth in mm
- ddd: Depth in mm